PROJECT 24: Design and Analysis of 6T SRAM Cell by using Cadence Virtuoso

A Comprehensive Study of Analog Circuits

By: Priya Chaudhary, Astitva Johri and
Bhavya Solanki

Chapters:

List of Figures……..……. 3

1. Introduction …….. 4
2. Brief Description…… 5
3. Circuit Design……. 6-7
   3.1 Schematic Design……... 6
   3.2 Simulation Setup…….. 6
   3.3 DC Response and Analysis…..……. 7
4. Simulation Results…….. 8
5. Advantages and Disadvantages…….. 9
   5.1 Advantages……. 9
   5.2 Disadvantages……. 9
6. Conclusion…….. 10
7. Frequently Asked Questions (FAQs)…….. 11

LIST OF FIGURES

Figure 3.1 Circuit of 6T SRAM Cell...……..… 7

Figure 4.1 Simulation Results of 6T SRAM Cell..……..... 8

1. INTRODUCTION

A **6T SRAM (Static Random Access Memory) cell** is one of the most widely used memory designs in digital circuits due to its speed, stability, and low power consumption. It consists of **six transistors**—two **cross-coupled inverters** and **two access transistors**. The 6T SRAM cell is a **static memory**, meaning it retains its state as long as power is supplied, unlike **dynamic RAM (DRAM)**, which needs to be periodically refreshed.

The main advantage of the 6T SRAM cell is its fast access time and ability to store data indefinitely without requiring a refresh cycle. This makes it ideal for high-speed caches, registers, and other applications requiring fast memory. The memory cells are typically used in applications where data needs to be accessed quickly, and the system can afford a slightly larger physical area, as compared to DRAM cells that are more area-efficient but slower.

In this documentation, we will explore the **theory** behind the 6T SRAM cell, its **circuit design**, and how it is analyzed and designed using the **Cadence Virtuoso** tool, a leading platform for analog and digital custom IC design. Virtuoso allows for efficient simulation, optimization, and layout of the SRAM cell, ensuring that all parameters meet the required performance standards.

2. BRIEF DESCRIPTION

The **6T SRAM cell** is a bistable circuit, meaning it has two stable states to store a single bit of data (0 or 1). It consists of **six transistors**: two **cross-coupled inverters** and **two access transistors**. Here's a brief breakdown of the components and their roles:

1. **Cross-Coupled Inverters:**
   - The core of the 6T SRAM is formed by two **PMOS** and **NMOS** transistors configured as inverters. These inverters create a feedback loop that stores the bit data in the form of a stable voltage difference at two storage nodes (**Q** and **Q'**).
   - If **Q = 1**, then **Q' = 0**, and vice versa. These complementary voltages hold the bit until it is overwritten.
2. **Access Transistors:**
   - The **two NMOS access transistors** are connected to the bitlines (**BL** and **BLB**) and controlled by the **wordline**. They enable read and write operations.
3. **Stability and Noise Immunity:**
   - The cross-coupled inverters provide inherent stability, making the cell immune to small noise fluctuations. However, the access transistors can introduce contention during read/write operations if not properly controlled, potentially causing data corruption.
4. **Role of Cadence Virtuoso:**
   - **Cadence Virtuoso** is used to design, simulate, and lay out the SRAM cell. The tool helps verify the cell's functionality under different conditions, and ensures it meets power, performance, and area specifications. It also accounts for parasitic effects during post-layout simulation to guarantee accurate operation.

3. CIRCUIT DESIGN

3.1 Schematic Design

1. Open Cadence Virtuoso and start a new schematic design.
2. Place the following components from the library:
   - PMOS and NMOS transistors.
   - VDD (positive supply) and VSS (ground) sources.
   - Connect the PMOS and NMOS to form inverters for the cross-coupled structure.
   - Add the access transistors between the storage nodes (Q and Q') and the bitlines (BL and BLB).
3. Add the wordline that controls the gates of the access transistors.
4. Connect all components, ensuring correct pin connections for the storage nodes and bitlines.
5. Simulate the circuit using Spectre or ADE (Analog Design Environment).

3.2 Simulation Setup

- **Create a New Simulation Environment**: In **Cadence Virtuoso**, launch the **ADE (Analog Design Environment)** window. This is where all simulation settings are configured.
- **Select the Simulator**: Choose the **Spectre** simulator (recommended for analog simulations) to simulate the behavior of the SRAM cell.
- **Supply Voltage**: Set the supply voltage **VDD** (e.g., 1.8V) and **VSS** (0V) to match the SRAM design specifications.
- **Run Simulation:** Once the schematic and simulation settings are complete, click the **"Run"** button in **ADE** to begin the simulation.

3.3 DC Response and Analysis

- **Storage Node Voltages (Q and Q')**: Must stabilize near **VDD** (logic 1) or **ground** (logic 0).
- **Read/Write Stability**: Ensures that data can be read without disturbance and written reliably with sufficient **write margin**.
- **Access Transistor Sizing**: Adjust to ensure proper functioning of read/write operations.

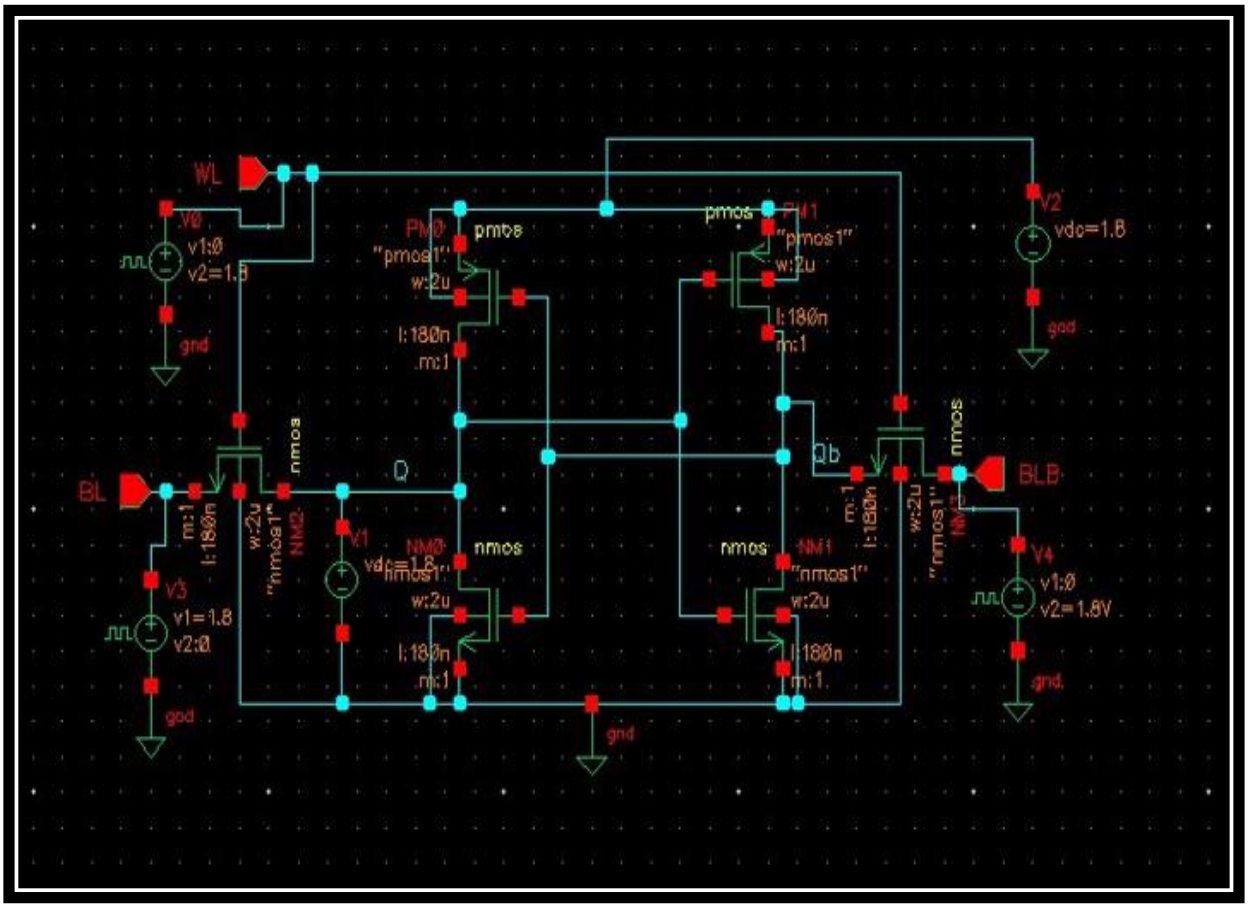

Figure 3.1 Circuit of 6T SRAM Cell

4. SIMULATION RESULTS

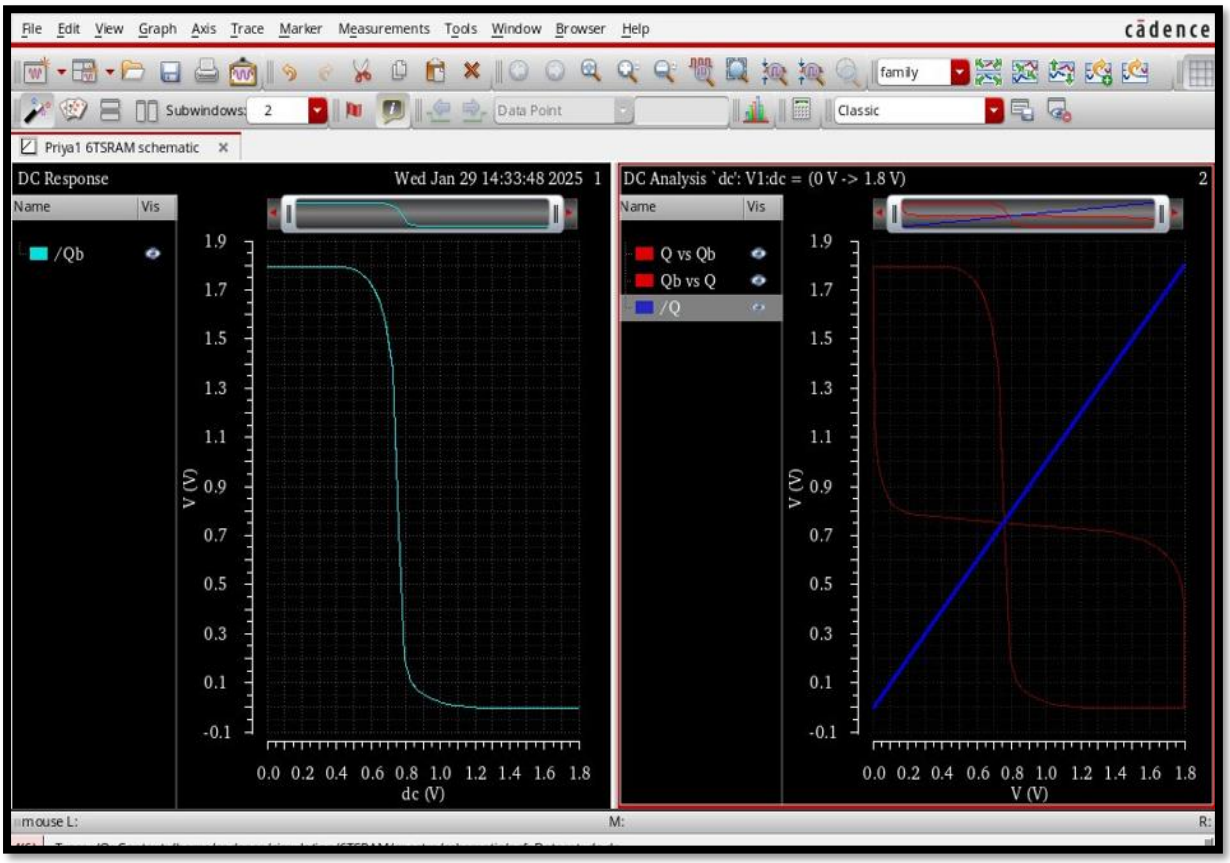

Figure 4.1: Simulation Results of 6T SRAM Cell

5. ADVANTAGES AND DISADVANTAGES

5.1 Advantages:-

1. **Speed:** The 6T SRAM cell provides fast read and write access times compared to dynamic memory cells.
2. **Stability:** The cross-coupled inverter structure ensures stable storage of the data without the need for periodic refreshing.
3. **Low Power Consumption:** Due to its static nature, the cell consumes less power during idle periods than dynamic RAM (DRAM).
4. **Compact Design:** The 6T SRAM cell has a small footprint compared to other memory cells like 8T or 12T SRAM, making it ideal for high-density memory applications.

5.2 Disadvantages:-

1. **Area and Complexity:** Each 6T SRAM cell uses six transistors, which makes it larger compared to DRAM cells (which use a single capacitor and a transistor), resulting in a lower density per unit area.
2. **Power Consumption During Write Operations:** While idle power consumption is low, writing data to the cell requires power to drive the bitlines and access transistors.
3. **Variability**: The performance of the SRAM cell can be affected by process variations, leading to variability in read and write access times.

6. CONCLUSION

The **6T SRAM cell** is a robust and efficient memory element that is essential for high-performance digital systems. With its simple design, consisting of just six transistors, it provides high speed and stable data retention without the need for refreshing. However, the complexity lies in optimizing the access transistors, wordline, bitline drive strength, and transistor sizing to ensure proper operation in all conditions.

The use of **Cadence Virtuoso** for the design, simulation, and layout of the 6T SRAM cell is critical for achieving optimal performance. By using Virtuoso, designers can simulate the cell under a variety of conditions, ensuring that the cell meets power, timing, and area constraints. Post-layout simulations ensure that the parasitic effects introduced during the layout phase are taken into account, providing a reliable design for production.

While the 6T SRAM cell offers excellent speed and stability, challenges like **write margin**, **power consumption during write operations**, and **process variation** must be addressed to ensure robust performance across different environments. The design and analysis of SRAM cells are fundamental to the creation of high-performance memory systems, which continue to evolve in terms of speed, efficiency, and integration.

7. FREQUENTLY ASKED QUESTIONS (FAQs)

Q1. What is the significance of the 6T design over other SRAM designs (like 8T)?

Answer: The 6T SRAM design is a more compact option compared to other configurations such as the 8T SRAM. The 8T SRAM offers more isolation between the storage node and bitlines, improving noise immunity and read stability but at the cost of additional transistors and a larger footprint. The 6T is a balanced option where the design minimizes area while providing a reliable operation.

Q2. Why are the access transistors crucial in a 6T SRAM cell?

Answer: The access transistors are essential for reading and writing data in the SRAM cell. They control the connection between the storage node and the bitlines, allowing the data to be either written to or read from the cell.

Q3. How does Cadence Virtuoso help in SRAM design?

Answer: Cadence Virtuoso is a powerful tool that allows for the creation, simulation, and verification of custom analog and digital circuits. In SRAM design, it helps in visualizing the schematic, running simulations to verify timing and functionality, and creating the layout for manufacturing.

Q4. How can I improve the write margin of a 6T SRAM cell?

Answer: The write margin can be improved by optimizing the sizing of the access transistors, increasing the drive strength of the bitlines, or using stronger pull-up transistors for better stability during write operations.

Q5. What role do parasitic elements play in SRAM design?

Answer: Parasitic elements such as capacitance and resistance introduced by layout, metal routing, and substrate can affect the performance of the SRAM cell, particularly its speed and stability. These elements need to be carefully considered during layout and post-layout simulation to ensure that the cell functions correctly in the final design.